User Manual

MAXIMONSTER

cod. MMX1509-MMX1512

Rev.03.09.24

LMA®
THE FUTURE OF GRINDING

LMA®

THE FUTURE OF GRINDING

Index

1. Introduction **04**

2. Machine description **04-05**
Monitoring and machine control

3. Serial Number Plate **05**

4. Safety **05-06**
Safety precautions Safety
standards Safety
instructions

5. Description of the grinding machine and initial operations **07-08**
Grinding machine MAXIMONSTER
Tools coupling

6. Instructions for use **09-11**

- Handle adjustment
- Machine start
- Machine function
- Machine shut down
- Assembly/disassembly
- Motor unit and adaptor operation
  for routine maintenance and repairs

7. Accessories coupling **12-14**

- Velcro tools holder AP attach
- Gear Plate Ø200mm AP
- Vacuum Kit with adjustable
  metallic splash guard

8. Maintenance **15**

9. Technical datas **16**

Declaration of Conformity CE **17**

1. Introduction

It is important that any and all persons who will make use of or perform maintenance on this machine reads this manual
carefully in order to fully understand its content.
This manual contains important information for the use and safety of this machine.
Please keep this manual nearby when using the machine for easy reference.
Only authorized personnel must use the machine.
In case of necessity, our service department is always available to provide advice or direct assistance.

2. Machine description

The powerful inverter motor can be used in single-phase mode, typically used in civil environments. Thanks to its quick removal mechanism of the GEAR PLATE, MAXIMONSTER can also become a single brush.
MAXIMONSTER, in the version with quick release (optional) can be disassembled in a few simple steps, so as to optimize storage and ensure a very easy transport, separating the engine body from the chassis body, significantly reducing the weight of each mechanical unit.

3. Serial number plate

The serial number plate is located on the inside portion of the machine handle.
It contains the general characteristics and the serial number of the machine.
The serial number is an important piece of information since it must be provided along with any request for assistance or parts.

4. Safety

Before using the machine, personnel must be familiar with the safety instructions provided in this manual.
Please keep this manual nearby when using the machine for easy reference.
Failure to consult the manual can result in damage or danger to the user and others.
The machine must only be used as described in the user manual
The misuse of the machine in ways not indicated in the manual precludes the Manufacturer from any responsibility or liability for harm caused to goods or persons.

Safety precautions

- The surface being treated must be swept clean and be free of pebbles, screws and other foreign objects that could damage the orbital drive plate
- Do not use the machine if the surface is not clean or if there is a risk that the pad driver could disengage or be damaged
- Remove any power cables or vacuum hoses from the surface to be treated
- Do not allow yourself to become disrupted while using the machine

Safety standards

- Ensure that the machine is clean and the handles are dry and free of any grease or oil
- Do not carry out any modifications on the machine. Always use approved power cables with ground prong. Ensure that the machine is equipped with ground prongs, do not replace it and always use cables have a ground prong.
- Connect the main power cable to an outlet that is equipped with an automatic breaker switch
- Use of the machine with a damaged power is dangerous and could cause a short circuit.
- Do not connect to power using a non-regulation cable or with tension on the cord
- Inspect and test electrical components regularly. Electrical components must satisfy all pertinent safety requirements
- If questions should arise regarding the safety of electrical components, always contact an expert electrician
- Maintenance on electrical components and other machine parts must be carried out exclusively by an expert electrician or a trained technician under the guidance and supervision of an expert electrician, always in adherence to electrical safety regulations.
- Disconnect the power cable during maintenance work
- Pay attention to power cables and plugs while the surface is wet
- Do not use the machine in the rain
- Keep the machine clean

Safety Instructions

- Disconnect the main power cable when replacing diamond tooling
- Always wear Personal Protective Equipments (PPE) such as gloves, a dust mask, protective eyewear and safety boots when using the machine or when changing tools

5. Description of the machine and initial operations

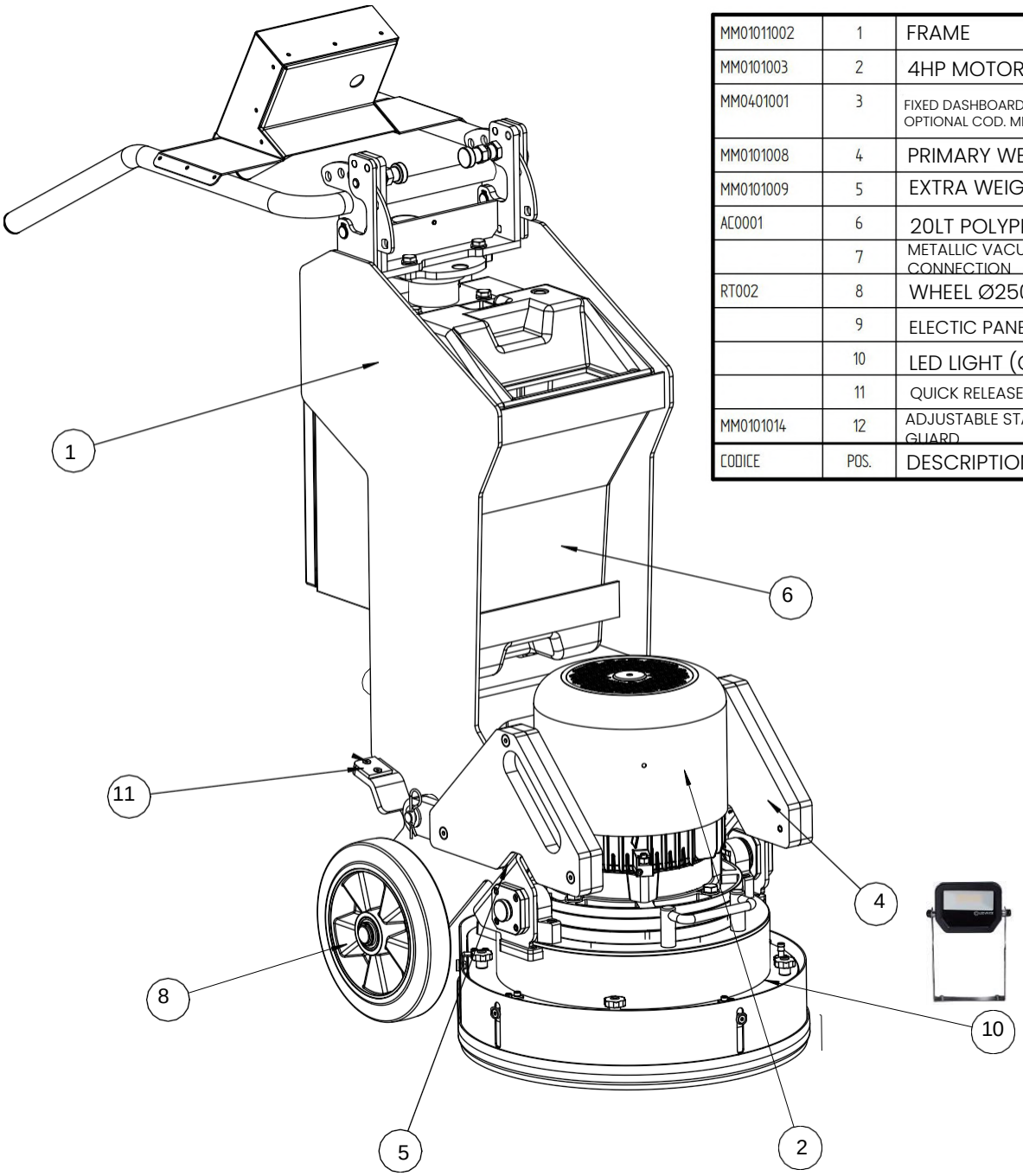

CODICE	POS.	DESCRIPTION
MM01011002	1	FRAME
MM0101003	2	4HP MOTOR WITH CAP
MM0401001	3	FIXED DASHBOARD, MOBILE DASHBOARD OPTIONAL COD. MM0201001
MM0101008	4	PRIMARY WEIGHT KG 7.5
MM0101009	5	EXTRA WEIGHT KG 6
AE0001	6	20LT POLYPROPYLENE TANK
	7	METALLIC VACUUM HOSE CONNECTION
RT002	8	WHEEL Ø250/50mm
	9	ELECTIC PANEL WITH INVERTER
	10	LED LIGHT (OPTIONAL)
	11	QUICK RELEASE SYSTEM (OPTIONAL)
MM0101014	12	ADJUSTABLE STAINLESS STEEL SPLASH GUARD

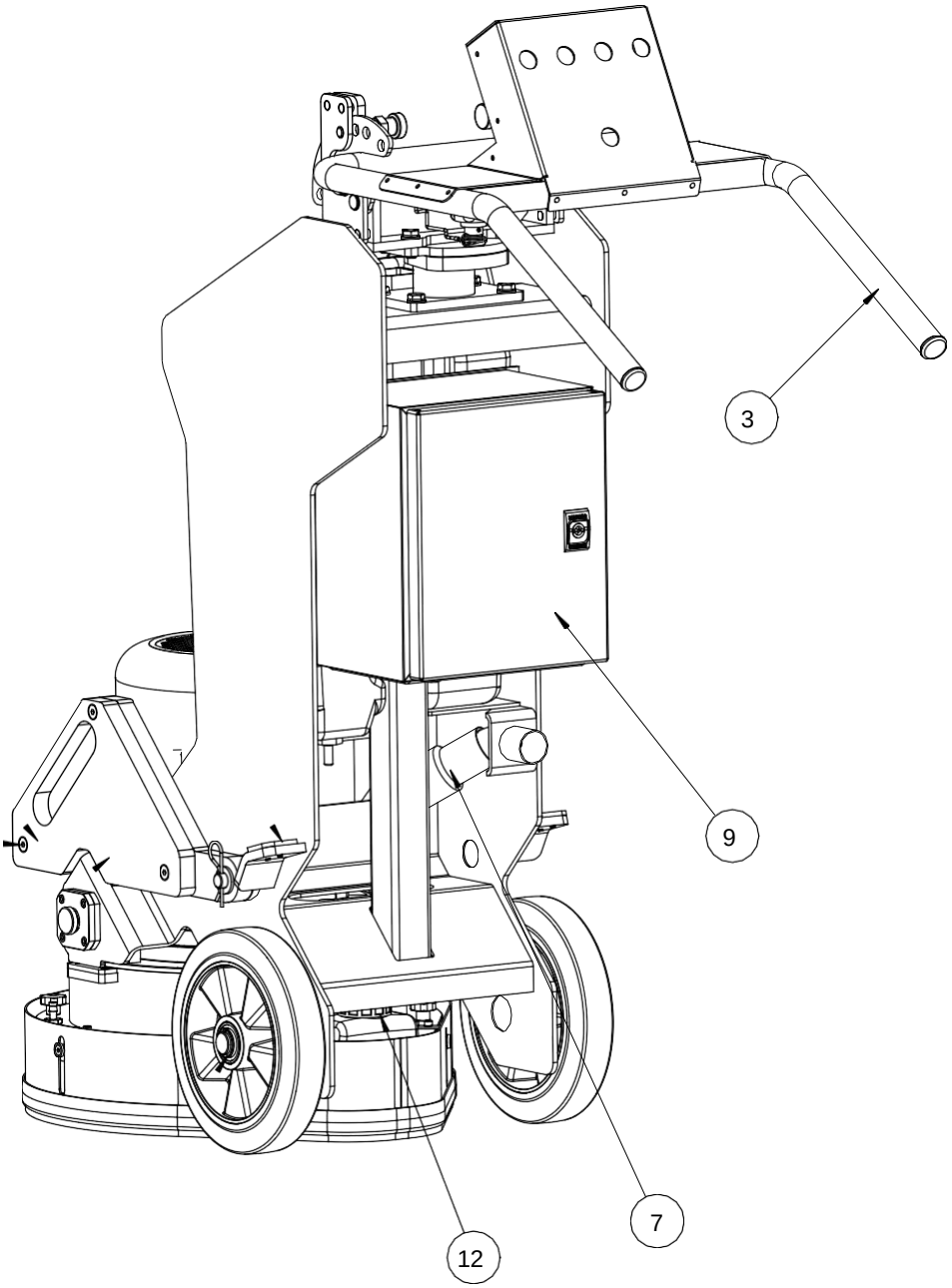
3
9
7
12

Tools coupling

Tilt the machine. **IMPORTANT!** The tipping must be carried out with the machine turned off in position as shown in the image, then lift the handle and overturn the engine head.
Leave the weights towards the rear direction of the frame.

PHASE 1: Bring the metal disc close to the female flange connector of the tool holder with the quick-connect pins. Insert the pins of the disc (1) into the slots of the tool holder (2), then turn the disc counterclockwise until it locks.

N.B.: ATTENTION! Make sure that the Gearplate is well inserted and that it is not disconnected from the tool assembly (Metal disc or Velcro disc). Improper use of the same, in case it is not well engaged, could cause crushing damage to the operator

PHASE 2: Lower the machine until the disc touches the ground, adjust the angle of the handle through the pushers and start operating.

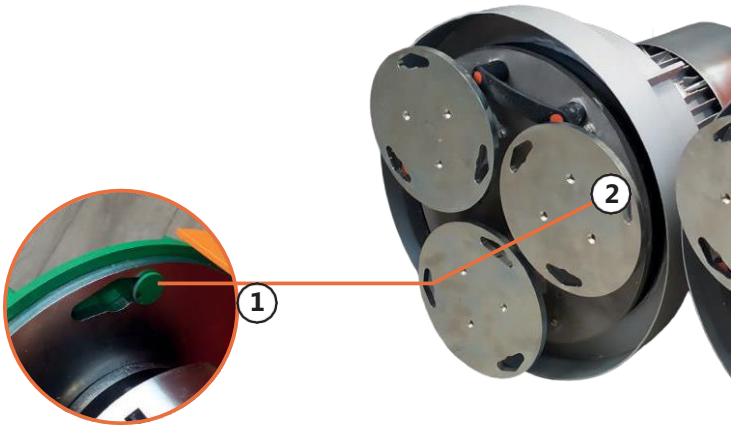

6. Instructions for use

• **Fixed handle adjustment (standard equipment)**
MAXIMONSTER comes standard with a very ergonomic fixed handle that allows you to adjust the inclination of the entire control system. It allows the operator to work behind the planetarium, controlling the progress during the grinding phases. The adjustment is made by means of pushers (1) that allow the operator to select the desired handle height, as well as to position it completely raised (in case of tipping head for changing tools/ accessories) or completely lowered for saving space.

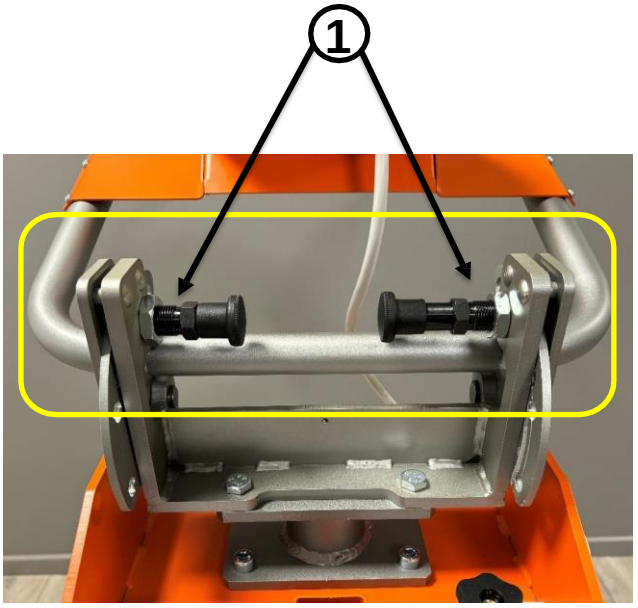

• **Mobile handle adjustment (optional cod. MM0101004 MOBILE HANDLE KIT)**
MAXIMONSTER is optionally equipped with a mobile rotating handle, which increases the ergonomics and functionality of the machine. Thanks to a rotating support that allows the handle to move further, the operator can work in front of the motor in order to control the machine even in narrow spaces and with reduced visibility.

• **Usage during the grinding process**

- Place the machine on the surface and after adjusting the desired height of the handle, prepare for the intervention;
- Start the grinding process;
- The machine can be controlled by the user by moving it from right to left or vice versa, in CLOCKWISE or COUNTERCLOCKWISE direction.
- The adjustment of the rotation speed (from min to max) of the motor flange can be done via the potentiometer.

• **Machine power off**

- Select the OFF position on the rotation selector or press, in case of emergency, the emergency STOP button;
- Disconnect the power cable from the plug.

• **Motor unit and adaptor operation for routine maintenance and repairs**

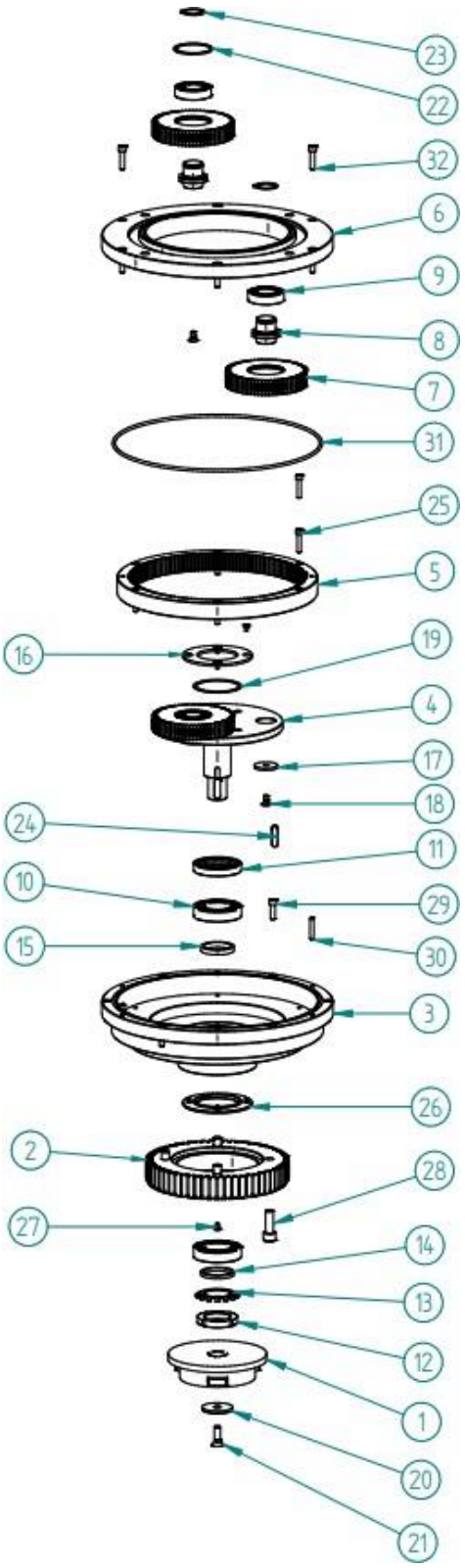

	32	6	VITE M6X25 UNI 5931
	31	1	O-RING 41050
	30	2	SPINA A ø5X30 UNI 6364
	29	6	VITE M6X20 UNI 5931
	28	4	VITE M10X30 UNI 5931
	27	8	VITE M4X8 UNI 5933
BR0101014	26	1	TAPPO TIPO 1
	25	3	VITE M5X25 UNI 5931
	24	1	LINGUETTA UNI 6604-A 8X7X28
	23	3	ANELLO ø25 UNI 7435
	22	3	ANELLO ø47 UNI 7437
	21	1	VITE M8X20 UNI 5933
BR0101017	20	1	RONDELLA TIPO 2
BR0101016	19	1	DISTANZIALE TIPO 3
	18	3	VITE M6X12
BR0101012	17	3	RONDELLA TIPO 1
BR0101013	16	1	TAPPO TIPO 2
BR0101015	15	1	DISTANZIALE TIPO 1
BR0101006	14	1	DISTANZIALE TIPO 2
	13	1	ROSETTA DI SICUREZZA MB7
	12	1	GHIERA SKF KM7
	11	1	PARAOLIO 42X62X7 HMSA10 RG
	10	2	CUSCINETTO 6007-2RS1
	9	3	CUSCINETTO 6005-2RSH
BR0101011	8	3	ALBERO SATELLITI
BR0101064	7	3	RUOTA SATELLITE
BR0101058	6	1	FLANGIA MOTORE
BR0101008	5	1	RUOTA INTERNA FISSA
BR0101010	4	1	PORTATRENO
BR0101009	3	1	CARTER
BR0102003	2	1	RUOTA Z60
2121_01-006	1	1	FLANGIA D'INNESTO GP
Cod. DISEGNO	POS.	Q.TÀ	DESCRIZIONE
DISTINTA COMPONENTI			

7. Accessories coupling

• VELCRO TOOLS HOLDER Ø200mm AP

- To fix the velcro disc, flip the two heads taking care that it is in the tipping position.
- Bring the disc with the pins closer to the female flange of the tool holder and insert it by matching the pins of the disc (1) with the sockets of the tool holder (2), then rotate the disc counterclockwise until locking.
- Lower the machine until the disc touches the ground, adjust the angle of the handle and start operating.

• METAL BOND DISC Ø200mm AP

- Attach the metal-bond disc 200mmAP to the tool plate (1) and turn the disc counterclockwise;
- Bring the metal disc close to the female flange connector of the tool holder with the quick-connect pins. Fit the disc pins (1) with the tool holder sockets (2), then turn the disc counterclockwise until locked;
- Lower the machine until the disc touches the ground, adjust the angle of the handle and start operating.

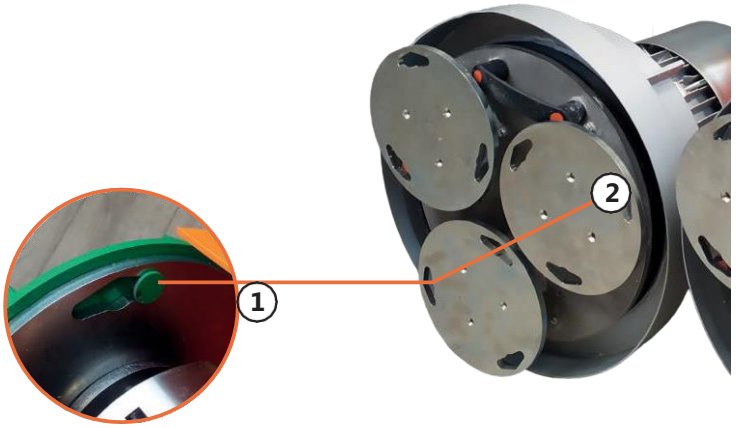

• PRIMARY WEIGHT 7,5kg AND EXTRA WEIGHT 6kg

- To fix the lateral weights, place them on the frame and match the notches with the frame, then secure them with the elastic cotter (picture 1)
- When tipping or changing tools, it is suggested to keep the weights up (picture 2). Additional weight is suggested to increase the pressure of the machine

Picture 1

Picture 2

- **GEAR PLATE SATELLITE PLATE Ø200mm AP Cod.GP10PT005**

Satellite plate entirely made with tempered steel resistant to chemicals.
Revolution turns from 400-800 rpm

- Steel gears (7). Easier cleaning for ordinary and extraordinary maintenance. Recommended greasing with lubricating grease provided by LMA MACHINE cod. ACDC119. Perform routine maintenance every 8/10 hours of use of the Machine. The Gearplate must be disassembled before greasing the gears.
- Ergonomic handles (8) for lifting, inserting, transport and disassembly of the Gear Plate. Thanks to a weight of less than 25kg, the operator can easily transport it separately from the grinding machine.
- Lower (9) and upper coverage (10)
- Dust ring (13) to ensure the clamping between GEAR PLATE and casing and prevent the entry of sanding dust into the gears (7).
- Bushing support for bearings (11)
- Flange for accessories NUM attach (12)
- Pinion shaft (14)

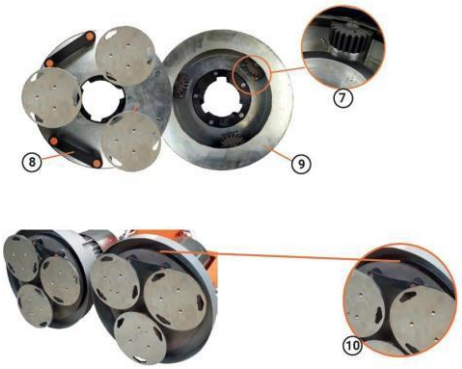

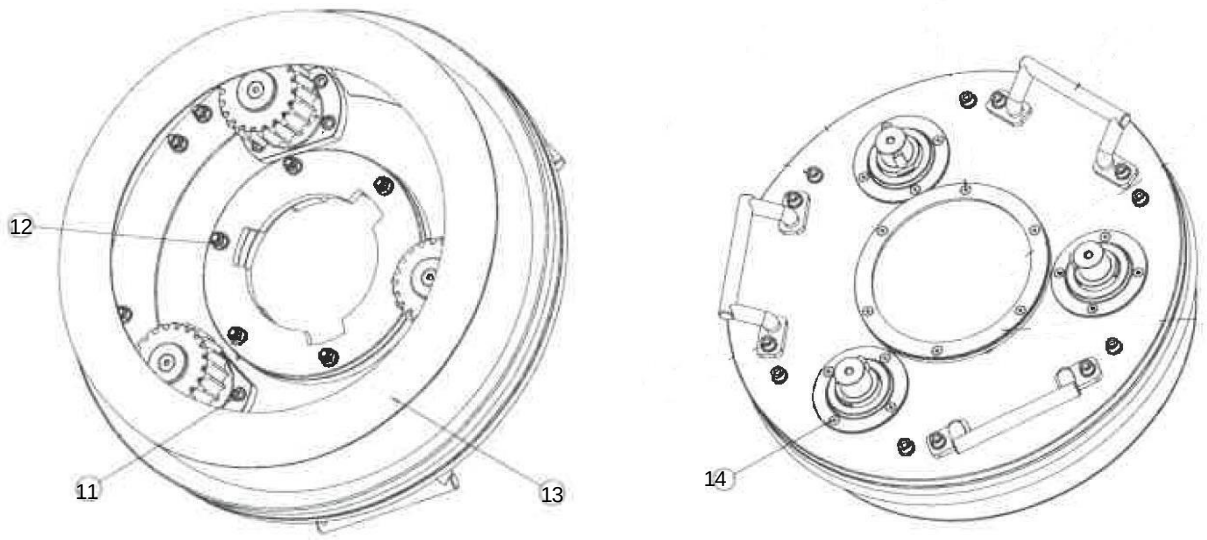

Exploded view Gear Plate Ø200mm cod. GP10PT005

Valid for CHIMAERA, MAXIMONSTER, BRUTALE 48

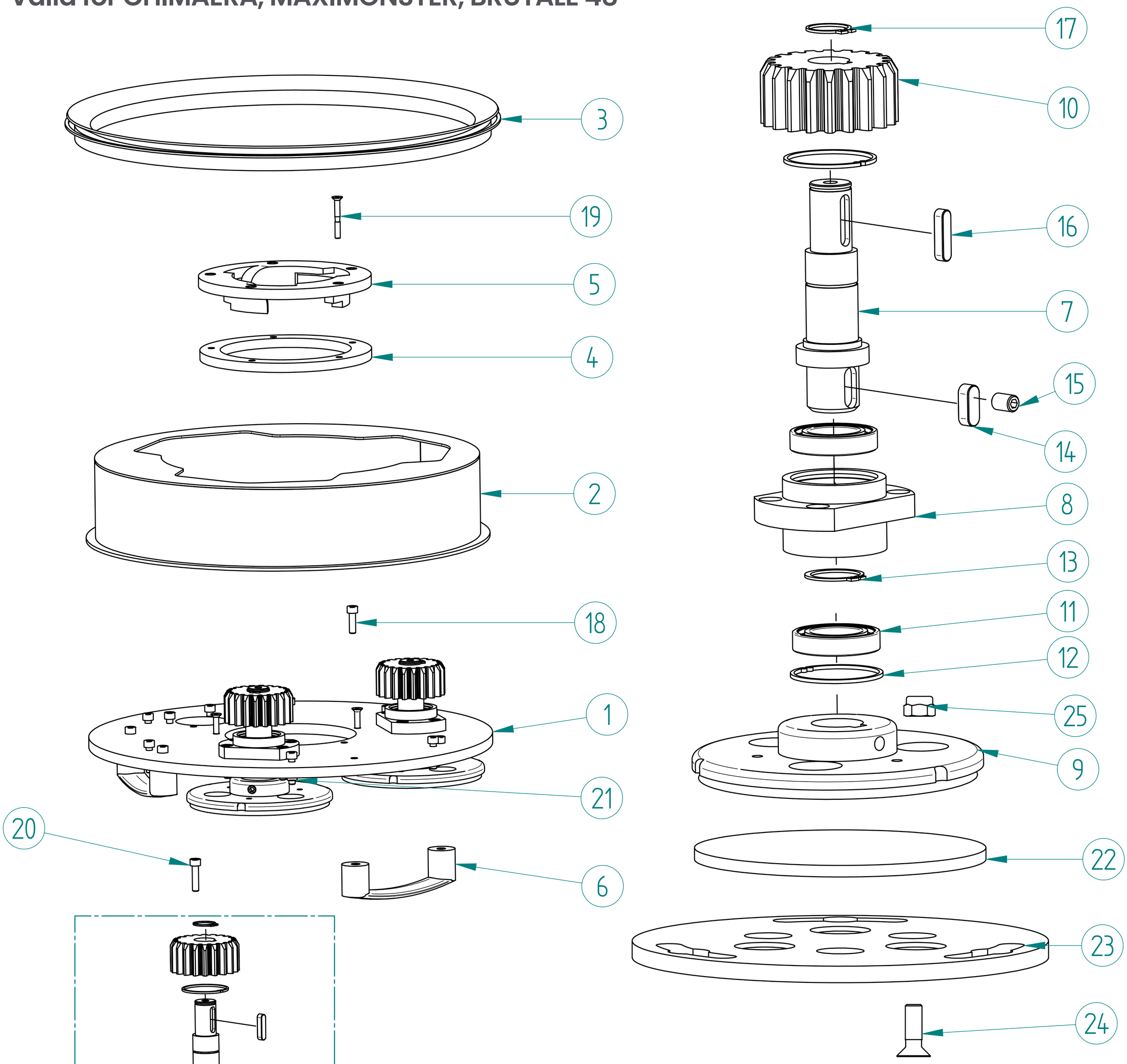

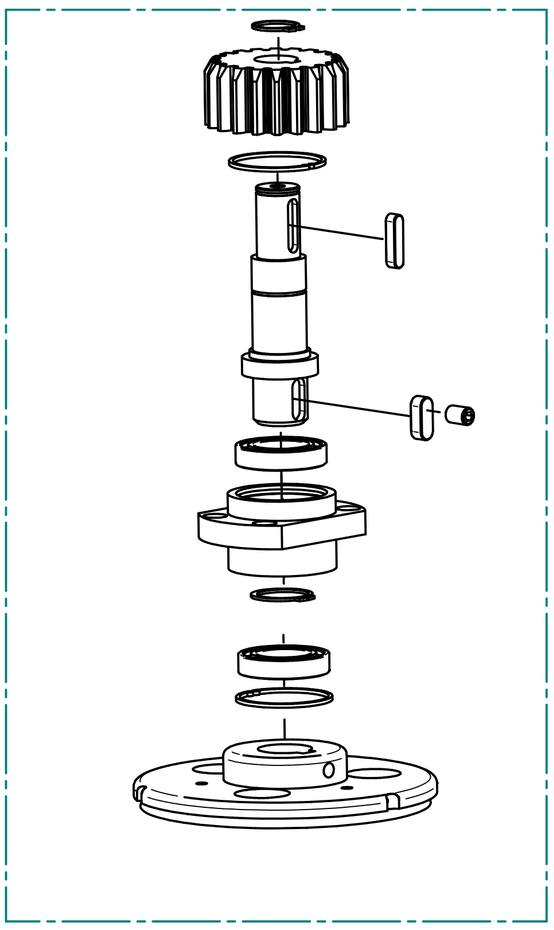

GRUPPO SATELLITE

GRUPPO SATELLITE

VDA08	25	9	DADO AUTOBLOCCANTE M8
TSPEIM8X35ZN	24	9	VITE TSPEI M8x35
ACC0018	23	3	PORTADIAMANTE ⌀200
	22	3	GOMMA SPESSORE
VITETCEIM6X40ZN	21	6	VITE TCEI M6X40
VITETCEIM6X16	20	4	VITE TCEI M6X16
VDA06	19	12	DADO AUTOBL. M6 BASSO
VTCEIM6X25	18	12	VITE TCEI M6X25
INT47120	17	3	ANELLO ⌀20
UNI6604A6X6X25	16	3	LINGUETTA 6X6X25
INT5927129812	15	3	GRANO STEI 5927 M8X12
UNI6604A8X7X20	14	3	LINGUETTA 8X7X20
INT47125	13	3	ANELLO ⌀25
47140	12	6	ANELLO ⌀42
CUS619052RS	11	6	CUSCINETTO ALBERO
RCDC03020	10	3	SATELLITE Z-20
ACC0017	9	3	PORTADIAMANTE ⌀140
LM35MM-00	8	3	BOCCOLA CUSCINETTO
GP10AB001-03	7	3	ALBERO SATELLITE
ACDC106	6	3	MANIGLIA M6 PER CARCASSA
P0107-00	5	1	FLANGIA INSERIMENTO
P0106-00	4	1	FLANGIA TRASCINAMENTO
350VA	3	1	ANELLO V-RING NBR
GP10PT102	2	1	ASSIEME SALDATO
GP10PT001	1	1	PIATTO 3T GEARPLATE ⌀140
Cod. DISEGNO	POS.	Q.Tà	DESCRIZIONE
DISTINTA COMPONENTI			

THE FUTURE OF GRINDING

- **Splash guard band and adjustable metallic splash guard**

  - The splash and dust guard band (standard equipment) can be assembled and disassembled when the machine is off and the power cable is unplugged. Assemble or disassemble the band while the machine is on can cause serious damage to the operator;
  - To insert the splash-guard band, simply wrap the band around the base of the engine frame carcass and tighten it on itself, making the male velcro adheres with the female part. In this way, the working area where dust and residues accumulate, there will be no leaks harmful to the operator.

  - The adjustable metallic splah-guard (optional) can be fixed after overturning the motor unit, bringing it closer to the casing to match the fixing slots with the threaded holes placed on the bell.
  - Fix the adjustable metallic splash guard by tightening the 4 screws to the casing. The adjustable metallic splash guard will swing always remaining levelled with the floor, ensuring protection from splashes and dust

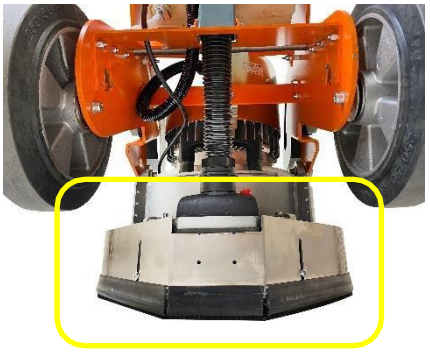

Metallic vacuum hose connection

Fix the tuboflex in the appropriate hole under the tank.

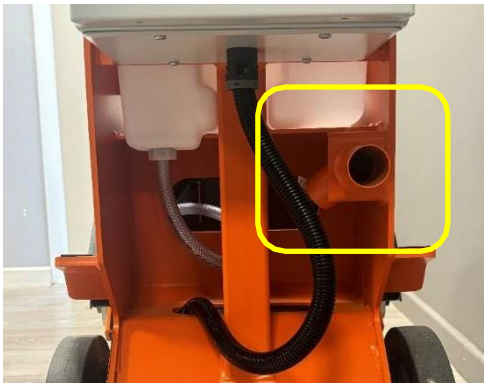

8. Maintenance

Work exclusively with original LMA spare parts.

- Carry out regular checks to ensure that tools are in good condition. Replace immediately if cracked or broken;
- Clean the machine daily with compressed air and gentle cleaning products. Never use a pressure washer to clean the machine;
- At the end of work, store the machine, clean and dry. Protect the electric motor from moisture, heat, dust and shock;
- Any repair must be carried out by qualified personnel or by an authorized LMA Machine dealer in order to guarantee the safety and reliability of the machine;
- No warranties will be granted for modified machinery or equipment after receipt without the express permission of the manufacturer LMA MACHINE.

Gear cleaning

- Make sure the motor flange and the crown support are always clean and that the teeth of the crown are not worn;
- Make sure that the GEAR PLATE e and the gears are well cleaned and not worn;
- In case of wear or failure of the gears contact the distributor LMA Machine in order to ensure the maintenance of the warranty.

Technical datas

TECHNICAL DATAS		MAXIMONSTER SINGLE-PHASE VS	MAXIMONSTER THREE-PHASE VS
CODE		MMX1509	MMX1512
POWER	[W-Hp] max	3000-4	2200-4
POWER SUPPLY	[ph V-Hz]	230/50-60	400/50-60
AMPERAGE	[A]	14	8,1
N. MOTOR FLANGE ROTATIONS	[rpm]	120-180	120-180
ROTATION'S SPEED WITH GEAR PLATE Ø200mm AP	[rpm]	800-1200	800-1200
DISCS DIAMETER	[mm]	200	200
WORKING WIDTH	[mm]	452	452
PACKING DIMENSIONS	[mm]	120X80X140	120X80X140
WEIGHT	[kg]	199	199

THE FUTURE OF GRINDING

DECLARATION CE OF CONFORMITY

(All. II A Direttiva Macchine 2006/42/CE)

The manufacturer

LMA MACHINE S.r.l, via Teramo 11, 65024, Manoppello (PE)

Declares under its own responsability that the product:

BRUTALE SERIES Model MAXIMONSTER VS cod. MMX1509

Matricola	Anno costruzione	Type
		GRINDING MACHINE

complies with the following Community Directives:

- **Machinery Directive** 2006/42/EEC of the European Parliament and of the Council of 17 May 2006 on machinery and amending Directive 95/16/EC;
- **Low tension regulations (DBT) 2014/35/UE** transposed into the Italian National legislative system with D.lgs. n. 86/2016;
- **Electromagnatic compatibility regulations EMU 2014/30/EU;**

complies with the following harmonised standards:

UNI EN 12100: machinery safety;
CEI 60335-2-72: Special rules for floor treatment machines with or without commercial traction;
EN 60204-1 /2018: "Safety Machinery, Electrical Components, general requirements"; **IEC34 – 1, IEC34 – 7, IEC72 –1;**
CEI 2 – 14;
EN60204, EN60034 – 5, EN50081 – 1, EN50081 – 2.

Authorised person to compile the technical file established in the Community:

Daniele Barbone
Name
Via Teramo,11 65024 PE MANOPPELLO Italy

Place, Date

Manoppello lì, 02.01.2024

Legal representative
LMA MACHINE S.r.l
Daniele Barbone

LMA MACHINE SRL
Via Teramo, 11 - Tel. +39 085-8562076
65024 Manoppello (PE)
e-mail: info@lmamachine.com

LMA®

THE FUTURE OF GRINDING

Via Teramo, 11, 65024
T. +39 085 8562076 / +39 085 8121061
Manoppello Scalo (PE) Italy
email: info@lmamachine.com
www.lmamachine.com